AC/DC current monitoring in 1-phase mains

G2IW5A10

Monitoring relays - GAMMA series

Windowfunction

Supply voltage selectable via power modules

1 change-over contact

Width 22.5mm

Industrial design

Technical data

1. Functions
AC/DC current monitoring in 1-phase mains monitoring the window between Min and Max with adjustable thresholds and adjustable tripping delay.

2. Time ranges

	Adjustment range	
Start-up suppression time:	-	
Tripping delay:	0.2s	10s

3. Indicators

Green LED ON:	indication of supply voltage
Yellow LED ON/OFF:	indication of relay output
Red LED ON/OFF:	indication of failure of the corresponding threshold
Red LED flashes:	indication of tripping delay of the corresponding threshold

4. Mechanical design
Self-extinguishing plastic housing, IP rating IP40
Mounted on DIN-Rail TS 35 according to EN 50022
Mounting position: any
Shockproof terminal connection according to VBG 4 (PZ1 required), IP rating IP20
Tightening torque: max. 1Nm
Terminal capacity:
- 1 x 0.5 to 2.5mm² with/without multicore cable end
- 1 x 4mm² without multicore cable end
- 2 x 0.5 to 1.5mm² with/without multicore cable end
- 2 x 2.5mm² flexible without multicore cable end

5. Input circuit

Supply voltage:	
12 to 400V AC	terminals A1-A2 (galvanically separated) selectable via power modules TR2
Tolerance:	according to specification of power module
Rated frequency:	according to specification of power module
Rated consumption:	2VA (1.5W)
Duration of operation:	100%
Reset time:	500ms
Residual ripple for DC:	-
Drop-out voltage:	>30% of the supply voltage
Overvoltage category:	III (according to IEC 60664-1)
Rated surge voltage:	4kV

6. Output circuit
1 potential free change-over contact

Rated voltage:	250V AC
Switching capacity (distance <5mm):	750VA (3A / 250V AC)
Switching capacity (distance >5mm):	1250VA (5A / 250V AC)
Fusing:	5A fast acting
Mechanical life:	20 x 10^6 operations
Electrical life:	2 x 10^5 operations at 1000VA resistive load
Switching frequency:	max. 60/min at 100VA resistive load max. 6/min at 1000VA resistive load (according to IEC 947-5-1)
Overvoltage category:	III (according to IEC 60664-1)
Rated surge voltage:	4kV

7. Measuring circuit

Measured variable:	DC or AC Sinus (48 to 63Hz)
Input:	
20mA AC/DC	terminals K-I1(+)
1A AC/DC	terminals K-I2(+)
5A AC/DC	terminals K-I3(+)
Overload capacity:	
20mA AC/DC	250mA
1A AC/DC	3A
5A AC/DC	10A
Input resistance:	
20mA AC/DC	2.7mΩ
1A AC/DC	47mΩ
5A AC/DC	10mΩ
Switching threshold:	
Max	10% to 100% of IN
Min	5% to 95% of IN
Overvoltage category:	III (according to IEC 60664-1)
Rated surge voltage:	4kV

8. Accuracy

Base accuracy:	≤3% (of maximum scale value)
Frequency response:	-10% to +5% (48 to 63Hz)
Adjustment accuracy:	≤5% (of maximum scale value)
Repetition accuracy:	≤2%
Voltage influence:	-
Temperature influence:	≤0.05% / °C

9. Ambient conditions

Ambient temperature:	-25 to +55°C (according to IEC 68-1) -25 to +40°C (according to UL 508)
Storage temperature:	-25 to +70°C
Transport temperature:	-25 to +70°C
Relative humidity:	15% to 85% (according to IEC 721-3-3 class 3K3)
Pollution degree:	3 (according to IEC 60664-1)
Vibration resistance:	10 to 55Hz 0.35mm (according to IEC 68-2-6)
Shock resistance:	15g 11ms (according to IEC 68-2-27)

Functions

Window function (WIN)
The output relay switches into on-position (yellow LED illuminated) when the measured current exceeds the value adjusted at the MIN-regulator. When the measured current exceeds the value adjusted at the MAX-regulator, the set interval of the tripping delay (DELAY) begins (red LED MAX flashes). After the interval has expired (red LED MAX illuminated), the output relay switches into off-position (yellow LED not illuminated). The output relay again switches into on-position (yellow LED illuminated) when the measured current falls below the value adjusted at the MAX-regulator (red LED MAX not illuminated). When the measured current falls below the value adjusted at the MIN-regulator, the set interval of the tripping delay (DELAY) begins again (red LED MIN flashes). After the interval has expired (red LED MIN illuminated), the output relay switches into off-position (yellow LED not illuminated).
The LEDs MIN and MAX are flashing alternating, when the minimum value for the measured current was chosen to be greater than the maximum value.

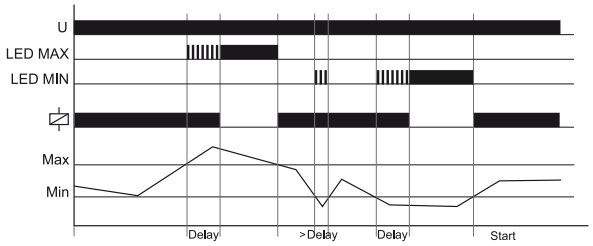

Connections

Range 20mA with power modul 24V AC

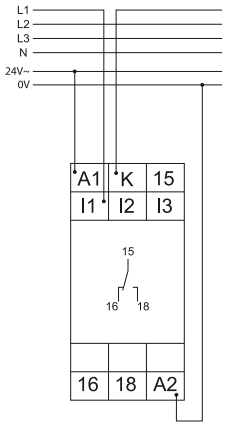

Range 1A with power modul 230V AC

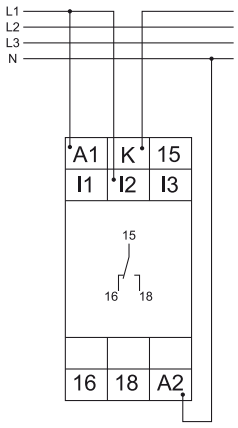

Range 5A with power modul 400V AC

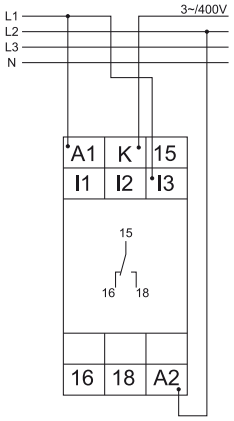
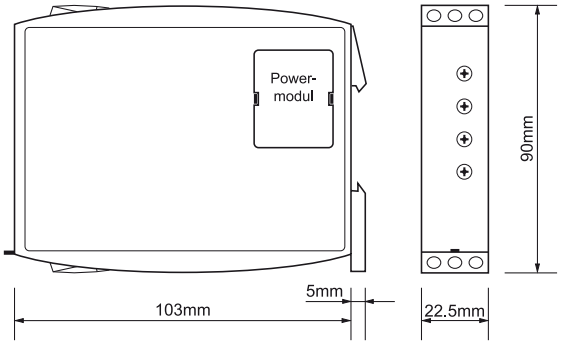
Dimensions